made in italy

IL PARASPIFFERI THE DRAUGHT STOPPER DIE TUERDICHTUNG LES PLINTHES EL CORTAVIENTOS EEN VALDORPEL O PARAVENTO

General Catalogue

13·14

the draught stopper

Comaglio

NOTHING WILL GET UNDER YOUR DOOR.

INDEX

History p. 3
Reading guide p. 4
Certifications p. 5

OUR SERIES p. 6
Pressure SERIES p. 8
Cheap SERIES p. 10
Special SERIES p. 12
No Sound SERIES p. 14
Comax SERIES p. 16
Universal SERIES p. 18

Showcases and sample p. 19

COMAGLIO:
DRAUGHT EXCLUDERS SINCE 1976.

Our company was founded in 1976 bringing draught excluders to Italy. Thirty years after that first historical patent and thanks to the experience of three generations, Comaglio continues its family business, but its products are now of international fame. From the garage workshop where Aldo Comaglio created the first Italian prototype draught excluder, up to our modern premises of today, close to Lake Garda, craftmanship and passion for the job have always fired our activities.

The first patent foresaw only two applications serving also as a drip, then evolution became the basis for Comaglio's creative engineering process. And so it was that in the early 1980s Comaglio, with a small staff, opened a factory in Gavardo (BS).

After the opening of an Italian market showing interest for this innovative product, the Comaglio draught excluder faced the international scenario at the start of the 90s. Business has grown in terms of staff, investments, technology and solutions, customer care and satisfaction being still our main objective. For this reason, in 2002 we extended our premises in Muscoline (BS).

Our quest is to identify solutions with the greatest care for details, using innovative and flexible production lines for our offer to a market in continuous evolution.

Today in more than 20 countries throughout the world, Comaglio is a synonym for quality, precision and technology.

HOW TO CHOOSE A DRAUGHT EXCLUDER.

Comaglio's mission is to provide a solution to every customer's need. In this brief introduction, we wish to provide a key to your choice of the solution that meets your needs.

1

WHICH KIND OF DOOR?

The draught excluder can be mounted in all types of doors: wood, aluminium, PVC, steel and armoured. The material of which the door is composed is the fundamental factor in choosing the draught excluder. Different types of door require different types of draught excluder due to their differing dimensions and types of fixings.

2

WHICH MECHANISM?

The mechanism is the draught excluder motor. Two solutions are available:

DOUBLE ADJUSTMENT

The double adjustment mechanism, exclusively patented by our company, allows the regulation of both the descent and inclination of the mobile profile. Although being removable as usual, the mechanism guarantees a decisive and homogeneous pressure along the whole length of the draught excluder.

OBSCILLATING

The obscillating mechanism is technically more simple than the double adjustment but offers excellent performance in the hold, duration and control of profile movement with a lining that acts thanks to the combined function of two rigid levers.

3

CHECK THE SECTION.

Checking the necessary section is often the first step in choosing the right draught excluder. Both the height and the breadth of the draught excluder are fundamental indications for use of our products. Especially in particular applications such as internal doors, or doors in aluminium or PVC.

4

WHICH SEAL?

The choice of the most suitable seal is an ideal complement in maximising the performance of the draught excluder. The choice of seal design and materials is important not only for the floor contact of the mobile profile, but is also obligatory when the doors have to be certified.

5

WHICH FASTENING?

Various fastening systems are available: from the traditional type that can be removed, to time-saving pre-mounted screws, to wings for particular solutions.
All systems are extremely functional and long-lasting. One's choice means to decide immediately which is the main need in terms of practicality and easy assembly, based on the type of door on which the draught excluder has to be mounted.

6

WHICH PUSH BUTTON?

The form and material of the push button are not only a question of aesthetics but - acting in combination with the rabbet - they optimise the function of the draught excluder without damaging the frame.

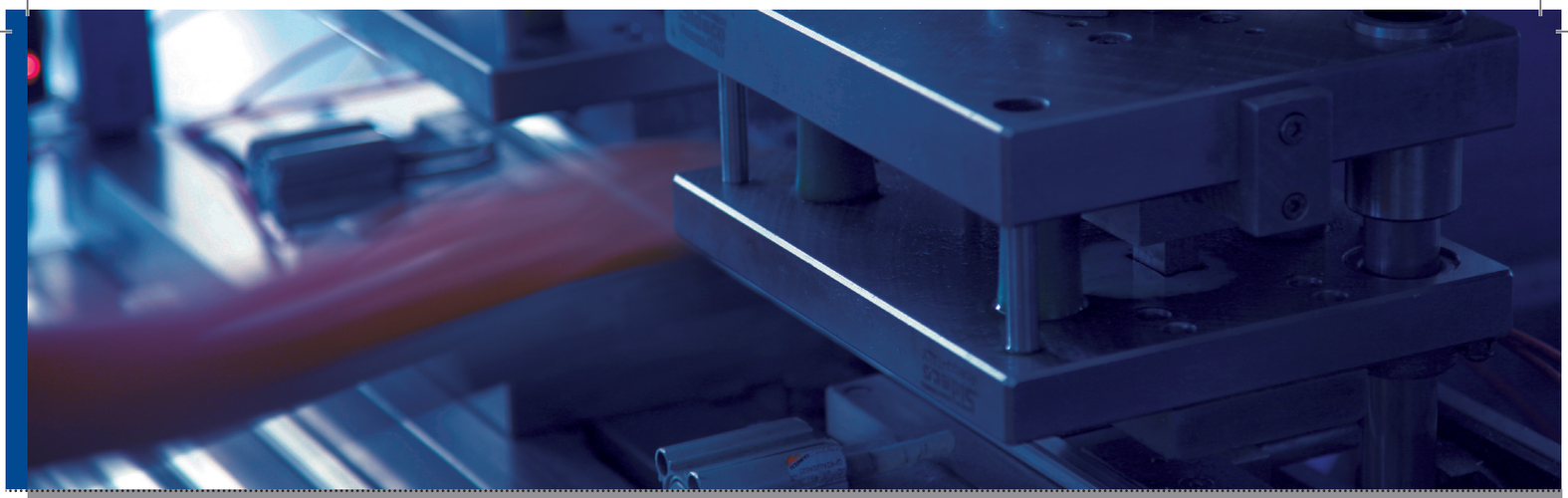

CERTIFICATION.
CERTIFICATION OF COMAGLIO PRODUCTS.

Continuous investments in research and development are guaranteed by a certification process to provide customers with an answer that not only complies with market needs, but also legal standards, in order to obtain products respecting European directives. In this respect Comaglio products have been certified for the resistance of the frame to noise, fire and wear.

NOISE ABATEMENT

The reduction of external noise is one of the main features of a good door. To improve this characteristic it is fundamental to optimise the closing of the gap between door and floor. Thus the draught excluder represents an essential and necessary element in obtaining good results.
In compliance with the standards UNI EN ISO 140, UNI EN ISO 717 and DIN 52 210, all our products have been certified with excellent results at Istituto Giordano and the IFT Institute of Rosenheim.

We have grouped all the draught excluders obtaining the best noise abatement results in our No Sound Series, but we are able to provide objective assessments for all other products on request. Given the importance of noise abatement certification in our sector, we have considered it important to verify the efficiency in this ambit of draught excluders belonging to the other series so we are able to provide customers with other useful elements of assessment..

FIRE RESISTANCE

The resistance of a door and draught excluder to fire and propagation of the same is contemplated by various directives. For this reason Comaglio draught excluders can be provided with linings that comply with the UL 94 standard, making them suitable for application on fire barrier doors.

LIFE CYCLE

The function of Comaglio draught excluders is guaranteed to be long-lasting. This is supported by the certification issued by Istituto Giordano which submitted catalogue items to 200,000 complete opening-closing movements of the door without finding any limitation of functions or other signs of wear and tear at the end of the test.

AIR SEAL

The standards EN 1026, EN 1027 and EN 14351 impose the CE mark on all pedestrian entry doors in the European Community which must therefore necessarily comply with certain safety requirements and various quality standards.

SERIES **PRESSURE**

1700
1712
1700 MINI
1770
1772
1770 MINI
1800
1813
1830

Available for doors:

> **PVC**
> **ARMOURED**
> **WOOD**
> **ALUMINIUM**

The **PRESSURE SERIES** is caracterised by the Comaglio twin adjusting mechanism; It is a patented mechanism designed to perfectly close the gap between doors and floors. The downward pressure applied by the seal to the floor is equal across the full width of the door. This is essential for optimal sealing in normal conditions and particularly important in more difficult situations such as uneven floors, tiling etc...

SERIES **CHEAP**

420
422
420 MINI
470
472
470 MINI
520
540

Available for doors:

> **PVC**
> **ARMOURED**
> **WOOD**
> **ALUMINIUM**

The **CHEAP SERIES** offers a new third generation tilting mechanism. It is works by branching off the double adjusting mechanism of the Pressure Series, since it moves the active function of the floor closing springs (which are limited now to a passive return function to 2 stiff levers that guarantee complete control of the moving profile and a controlled and even pressure to the floor.

SERIES **SPECIAL**

AE
110
920
120
270
170/12
170/15
1370
475

Available for doors:

> **PVC**
> **ARMOURED**
> **WOOD**
> **ALUMINIUM**

The **SPECIAL SERIES** is designed for fixing to aluminium frames, where the small size of the seal is of major importance. It is therefore possible to find within this range, a number of products well adapted to most aluminium applications. The item ref AE, new in 2006, has been added to comply with new European regulations whilst guaranteeing a speedy installation and a perfect seal to the floor.

SERIES
NO SOUND

ISOLA
1370NS
1770XNS
1770NS
1773 ACU
1770 ACU
1800XNS
1800NS

Available for doors:

> **ARMOURED**
> **WOOD**
> **ALUMINIUM**
> **STEEL**

All **NO SOUND SERIES** have successfully passed acoustic testing in a recognised European test laboratory. The Comaglio mechanism with double adjustment, silicone hardware and reinforced profiles guarantees a perfect floor seal and therefore perfect sound insulation. It is possible to fit the this series with a silicon seal which is self-extinguishing and certified for use with on fire doors.

SERIES
COMAX

1750
1450
1255
1250
1050
125SP
126SP
1151

Available for doors:

> **PVC**
> **ARMOURED**
> **WOOD**
> **ALUMINIUM**
> **STEEL**

The **COMAX SERIES** is designed by Comaglio for the DIY market. This series offers the perfect combination: guaranteed fonctionality using Comaglio patented mechanisms and detailed attractive design thanks to a removable seal in black metallic finish with a cover plate and matching end-caps available in 7 finishes. Accessories and complete reversibility make this Comax range applicable to all types of doors. For more economical use, Comaglio suggests the item 1250 in brushed or paint finished aluminium and the new item 1050, screwed on or dual adhesive in coloured PVC.

SERIES
UNIVERSAL

1375
1380
1350
1355
1360

Available for doors:

> **PVC**
> **ARMOURED**
> **WOOD**
> **ALUMINIUM**

The **UNIVERSAL SERIES** complete the range. Recent laws impose precise quality standards for doors, among which a certain air and water seal. The items in this series offer simple solutions, alternative to “classical” excluders and guarantee excellent results in thermal and acoustic insulation.

Comaglio
www.comaglio.it

SERIES
PRESSURE

> 1700 > 1712 > 1700 MINI > 1770 > 1772 > 1770 MINI > 1800 > 1813 > 1830

TRADITIONAL FASTENING BY MOVING INTERNAL PROFILE

1700

DR

> ARMOURED
> WOOD

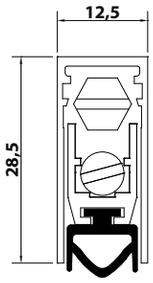

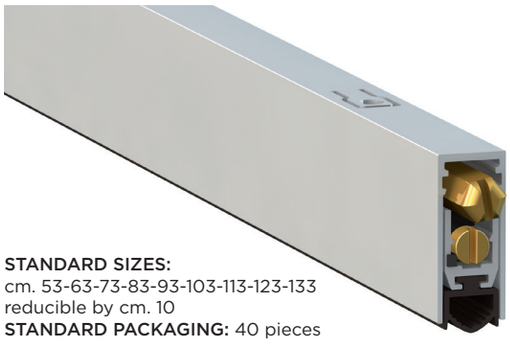

STANDARD SIZES:
cm. 53-63-73-83-93-103-113-123-133
reducible by cm. 10
STANDARD PACKAGING: 40 pieces

COMPONENTS
- Brass hexagonal push button
- EPDM seal

OPTIONS
- Round nylon push button
- Black brush 48x1100
- Self-extinguishing silicon seal

Sound insulation certificated by Giordano n. 218979

1712

DR

> ARMOURED
> WOOD
> PVC

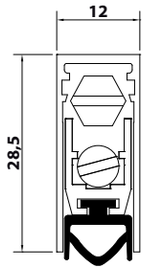

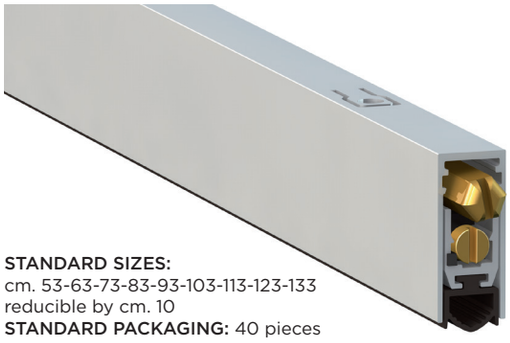

STANDARD SIZES:
cm. 53-63-73-83-93-103-113-123-133
reducible by cm. 10
STANDARD PACKAGING: 40 pieces

COMPONENTS
- Brass hexagonal push button
- EPDM seal
- "U" 12 mm. fixed profile

OPTIONS
- Round nylon push button
- Black brush 48x1100
- Self-extinguishing silicon seal

Sound insulation certificated by Giordano n. 294098

1700 MINI

DR

> ALUMINIUM
> ARMOURED
> WOOD

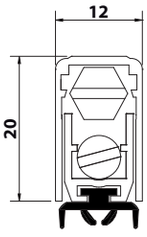

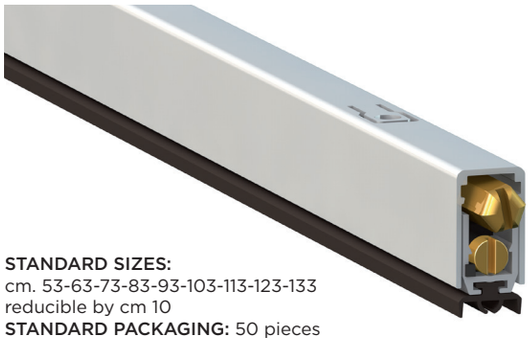

STANDARD SIZES:
cm. 53-63-73-83-93-103-113-123-133
reducible by cm 10
STANDARD PACKAGING: 50 pieces

COMPONENTS
- Brass hexagonal push button
- EPDM seal with 4 pressure points

OPTIONS
- Round nylon push button
- Black brush 48x1100

FASTENING BY PRE-FITTED SCREWS

1770

DR

> ARMOURED
> WOOD

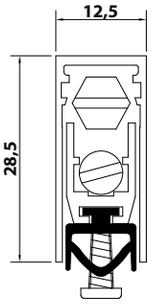

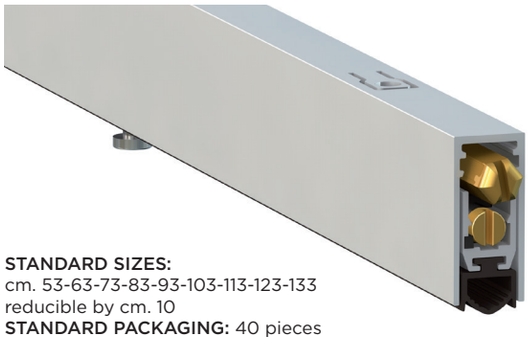

STANDARD SIZES:
cm. 53-63-73-83-93-103-113-123-133
reducible by cm. 10
STANDARD PACKAGING: 40 pieces

COMPONENTS
- Brass hexagonal push button
- EPDM seal

OPTIONS
- Round nylon push button
- Self-extinguishing silicon seal
- Self-threading screws for wood

Sound insulation certificated by Giordano n. 218979

1772

DR

> **ARMOURED**
> **WOOD**
> **PVC**

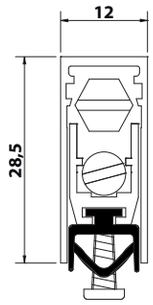

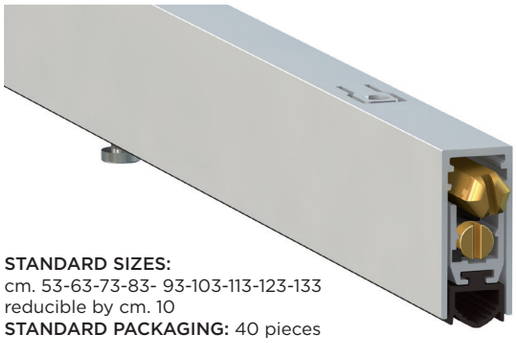

STANDARD SIZES:
cm. 53-63-73-83- 93-103-113-123-133
reducible by cm. 10
STANDARD PACKAGING: 40 pieces

COMPONENTS
- Brass hexagonal push button
- EPDM seal
- "U" 12 mm. fixed profile

OPTIONS
- Round nylon push button
- Black brush 48x1100
- Self-extinguishing silicon seal
- Self-threading screws for wood

Sound insulation certificated by Giordano n. 294098

1770
MINI

DR

> **ALUMINIUM**
> **ARMOURED**
> **WOOD**

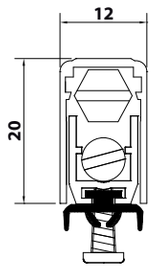

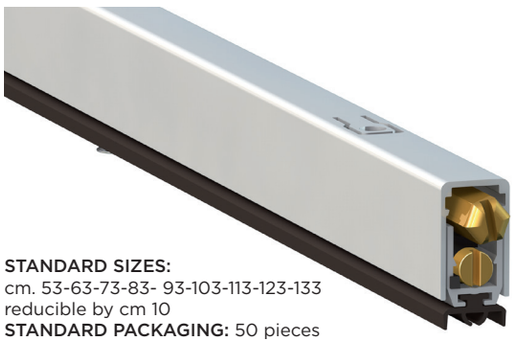

STANDARD SIZES:
cm. 53-63-73-83- 93-103-113-123-133
reducible by cm 10
STANDARD PACKAGING: 50 pieces

COMPONENTS
- Brass hexagonal push button
- EPDM seal with 4 pressure points

OPTIONS
- Round nylon push button
- Black brush 48x1100
- Self-threading screws for wood

FASTENING BY WINGS

1800

DR

> **ARMOURED**
> **WOOD**

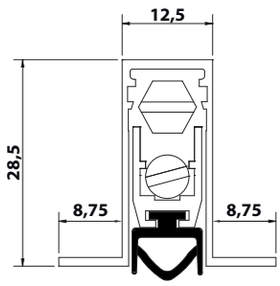

STANDARD SIZES:
cm. 53-63-73-83- 93-103-113-123-133
reducible by cm 10
STANDARD PACKAGING: 32 pieces

COMPONENTS
- Brass hexagonal push button
- EPDM seal

OPTIONS
- Round nylon push button
- Black brush 48x1100
- Self-extinguishing silicon seal

PVC VERSION
- "U" 12 mm. fixed profile (art. 1812)

1813

DR

> **PVC**

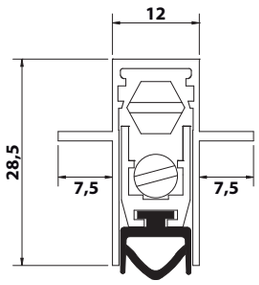

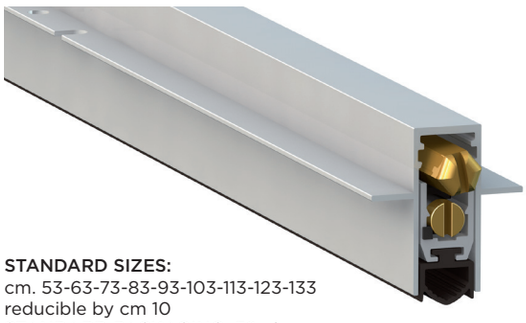

STANDARD SIZES:
cm. 53-63-73-83-93-103-113-123-133
reducible by cm 10
STANDARD PACKAGING: 32 pieces

COMPONENTS
- Brass hexagonal push button
- EPDM seal

OPTIONS
- Round nylon push button
- Black brush 48x1100
- Self-extinguishing silicon seal

1830

DR

> **ARMOURED**

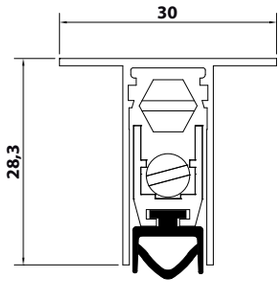

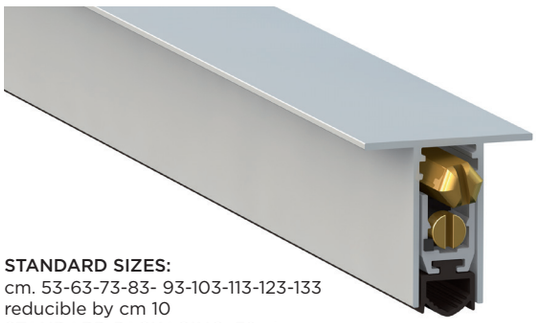

STANDARD SIZES:
cm. 53-63-73-83- 93-103-113-123-133
reducible by cm 10
STANDARD PACKAGING: 32 pieces

COMPONENTS
- Brass hexagonal push button
- EPDM seal

OPTIONS
- Round nylon push button
- Black brush 48x1100
- Self-extinguishing silicon seal

SERIES
CHEAP

> 420 > 422 > 420 MINI > 470 > 472 > 470 MINI > 520 > 540

TRADITIONAL FASTENING BY MOVING INTERNAL PROFILE

420

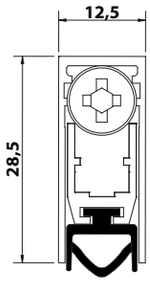

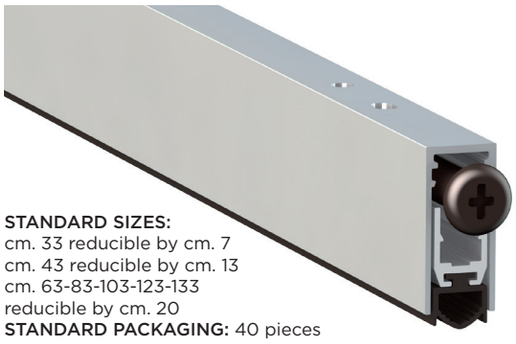

STANDARD SIZES:
cm. 33 reducible by cm. 7
cm. 43 reducible by cm. 13
cm. 63-83-103-123-133
reducible by cm. 20
STANDARD PACKAGING: 40 pieces

> ARMOURED
> WOOD

COMPONENTS
Round nylon push button
EPDM seal

OPTIONS
Brass hexagonal push button
Black brush 48x1100
Self-extinguishing silicon seal

Sound insulation certificated by Giordano n. 218979

422

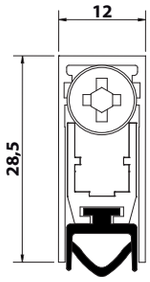

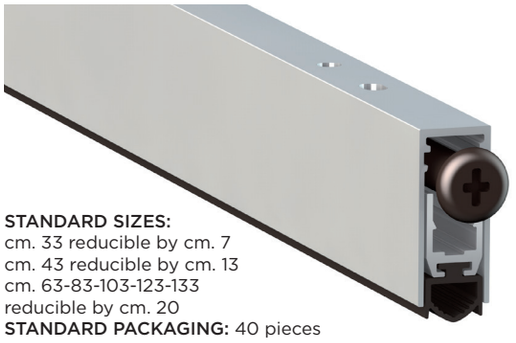

STANDARD SIZES:
cm. 33 reducible by cm. 7
cm. 43 reducible by cm. 13
cm. 63-83-103-123-133
reducible by cm. 20
STANDARD PACKAGING: 40 pieces

> ARMOURED
> WOOD
> PVC

COMPONENTS
Round nylon push button
EPDM seal
"U" 12 mm. fixed profile

OPTIONS
Brass hexagonal push button
Black brush 48x1100
Self-extinguishing silicon seal

Sound insulation certificated by Giordano n. 294098

420 MINI

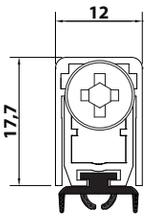

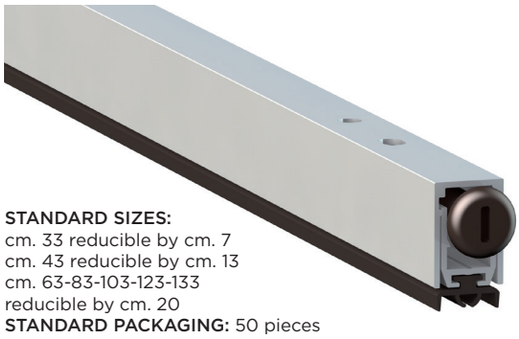

STANDARD SIZES:
cm. 33 reducible by cm. 7
cm. 43 reducible by cm. 13
cm. 63-83-103-123-133
reducible by cm. 20
STANDARD PACKAGING: 50 pieces

> ALUMINIUM
> ARMOURED
> WOOD

COMPONENTS
Round nylon push button
EPDM seal with 4 pressure points

OPTIONS
Brass hexagonal push button
Black brush 48x600

Sound insulation certificated by Giordano n. 262912

FASTENING BY PRE-FITTED SCREWS

470

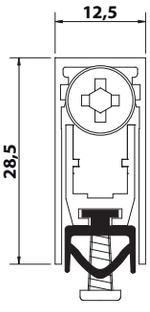

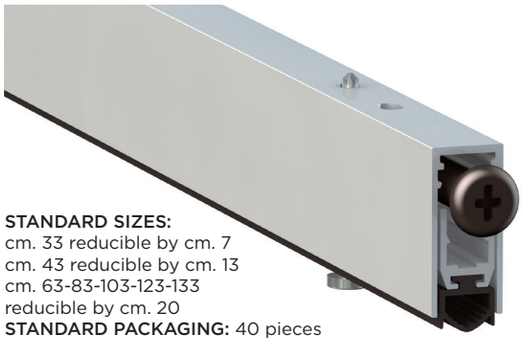

STANDARD SIZES:
cm. 33 reducible by cm. 7
cm. 43 reducible by cm. 13
cm. 63-83-103-123-133
reducible by cm. 20
STANDARD PACKAGING: 40 pieces

> ARMOURED
> WOOD

COMPONENTS
Round nylon push button
EPDM seal

OPTIONS
Brass hexagonal push button
Self-extinguishing silicon seal
Self-threading screws for wood

Sound insulation certificated by Giordano n. 218979

472

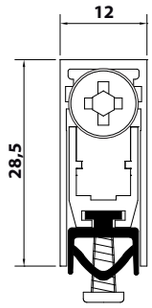

> **ARMOURED**
> **WOOD**
> **PVC**

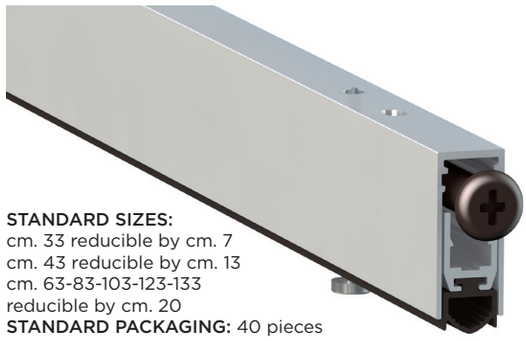

STANDARD SIZES:
cm. 33 reducible by cm. 7
cm. 43 reducible by cm. 13
cm. 63-83-103-123-133
reducible by cm. 20
STANDARD PACKAGING: 40 pieces

COMPONENTS
- Round nylon push button
- EPDM seal
- "U" 12 mm. fixed profile

OPTIONS
- Brass hexagonal push button
- Black brush 48x1100
- Self-extinguishing silicon seal
- Self-threading screws for wood

Sound insulation certificated by Giordano n. 294098

470
MINI

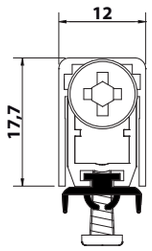

> **ALUMINIUM**
> **ARMOURED**
> **WOOD**

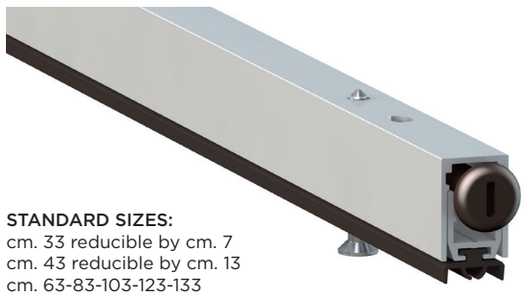

STANDARD SIZES:
cm. 33 reducible by cm. 7
cm. 43 reducible by cm. 13
cm. 63-83-103-123-133
reducible by cm. 20
STANDARD PACKAGING: 50 pieces

COMPONENTS
- Round nylon push button
- EPDM seal with 4 pressure points

OPTIONS
- Brass hexagonal push button
- Self-threading screws for wood

Sound insulation certificated by Giordano n. 262912

FASTENING BY WINGS

520

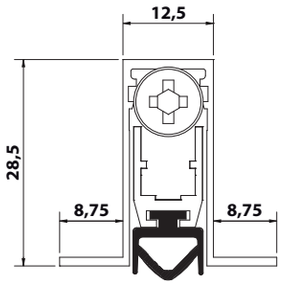

> **ARMOURED**
> **WOOD**

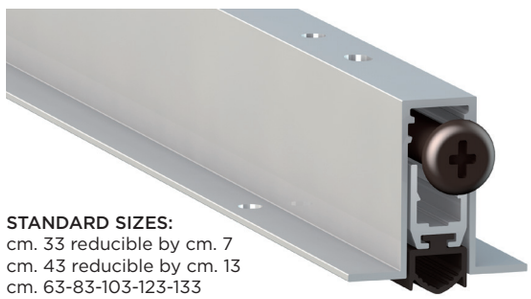

STANDARD SIZES:
cm. 33 reducible by cm. 7
cm. 43 reducible by cm. 13
cm. 63-83-103-123-133
reducible by cm. 20
STANDARD PACKAGING: 32 pieces

COMPONENTS
- Round nylon push button
- EPDM seal

OPTIONS
- Brass hexagonal push button
- Black brush 48x1100
- Self-extinguishing silicon seal

PVC VERSION
- "U" 12 mm. fixed profile (art. 512)

Sound insulation certificated by Giordano n. 218979

540

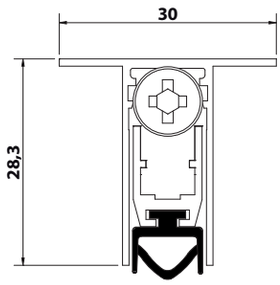

> **ARMOURED**

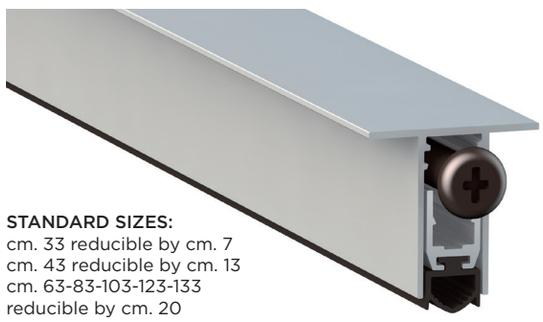

STANDARD SIZES:
cm. 33 reducible by cm. 7
cm. 43 reducible by cm. 13
cm. 63-83-103-123-133
reducible by cm. 20
STANDARD PACKAGING: 32 pieces

COMPONENTS
- Round nylon push button
- EPDM seal

OPTIONS
- Brass hexagonal push button
- Black brush 48x1100
- Self-extinguishing silicon seal

Sound insulation certificated by Giordano n. 218979

Comaglio
www.comaglio.it

SERIES
SPECIAL

> AE > 110 > 920 > 120 > 170/12 > 170/15 > 270 > 1370 > 475

FASTENING INSIDE EUROPEAN GROOVE

AE

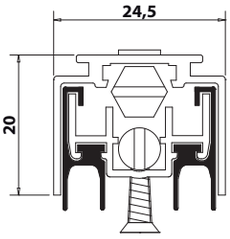

DR

> ALUMINIUM

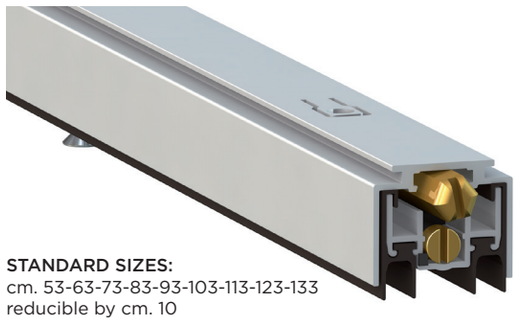

STANDARD SIZES:
cm. 53-63-73-83-93-103-113-123-133
reducible by cm. 10
STANDARD PACKAGING: 30 pieces

COMPONENTS
- Brass hexagonal push button
- Double self-extinguishing silicon seal

OPTIONS
- Round nylon push button
- Self-extinguish wrapped silicon seal

Sound insulation certificated by Giordano n. 294098

TRADITIONAL FASTENING BY MOVING INTERNAL PROFILE

110

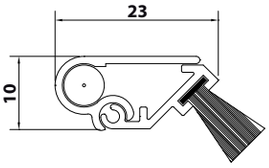

> ALUMINIUM

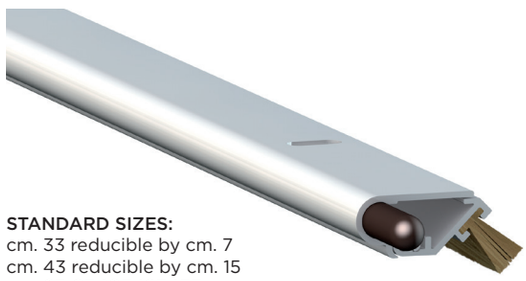

STANDARD SIZES:
cm. 33 reducible by cm. 7
cm. 43 reducible by cm. 15
cm. 63-83-103-123-133
reducible by cm. 20
STANDARD PACKAGING: 60 pieces

COMPONENTS
- Round nylon push button
- Black brush 48x1100

OPTIONS
- EPDM seal

920

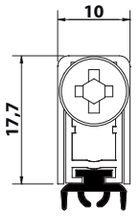

B

> WOOD

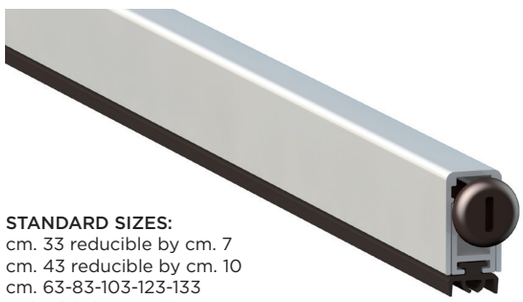

STANDARD SIZES:
cm. 33 reducible by cm. 7
cm. 43 reducible by cm. 10
cm. 63-83-103-123-133
reducible by cm. 20
STANDARD PACKAGING: 50 pieces

COMPONENTS
- Round nylon push button
- EPDM seal with 4 pressure points

OPTIONS
- Brass hexagonal push button
- Black brush 48x600

PRE-FITTED SCREWS VERSION
- Self-threading pre-fitted screws for wood (art. 970)

FASTENING BY PRE-FITTED SCREWS

120

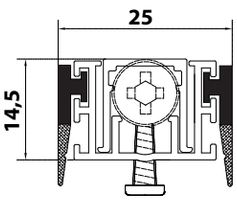

B

> ALUMINIUM

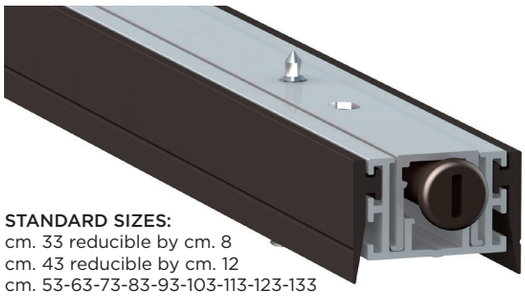

STANDARD SIZES:
cm. 33 reducible by cm. 8
cm. 43 reducible by cm. 12
cm. 53-63-73-83-93-103-113-123-133
reducible by cm. 10
STANDARD PACKAGING: 32 pieces

COMPONENTS
- Round nylon push button
- Double EPDM seal
- Double possible position of seal

OPTIONS
- Brass round push button

170/12

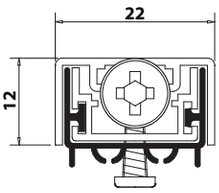

B

> **ALUMINIUM**

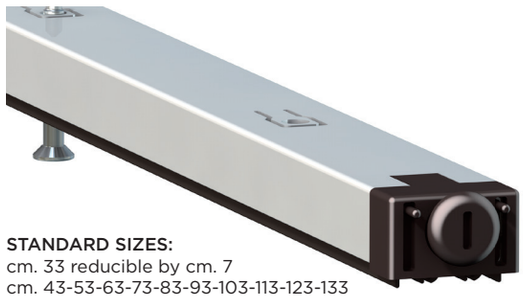

STANDARD SIZES:
cm. 33 reducible by cm. 7
cm. 43-53-63-73-83-93-103-113-123-133
reducible by cm. 10
STANDARD PACKAGING: 30 pieces

COMPONENTS
- Round nylon push button
- Self-extinguishing silicon seal

OPTIONS
- Brass hexagonal push button

Sound insulation certificated by Giordano n. 294098

170/15

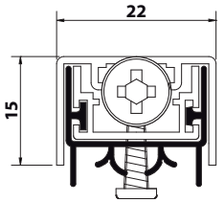

B

> **STEEL**
> **ALUMINIUM**

STANDARD SIZES:
cm. 33 reducible by cm. 7
cm. 43-53-63-73-83-93-103-113-123-133
reducible by cm. 10
STANDARD PACKAGING: 30 pieces

COMPONENTS
- Round nylon push button
- Self-extinguishing silicon seal

OPTIONS
- Brass hexagonal push button

Sound insulation certificated by Giordano n. 294098

270

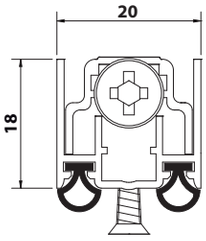

B

> **ALUMINIUM**
> **PVC**

STANDARD SIZES:
cm. 33 reducible by cm. 7
cm. 43 reducible by cm. 13
cm. 63-83-103-123-133
reducible by cm. 20
STANDARD PACKAGING: 30 pieces

COMPONENTS
- Round nylon push button
- 2 neoprene seals

OPTIONS
- Brass hexagonal push button

1370

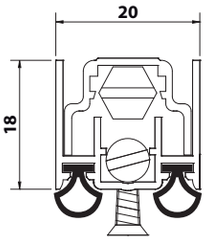

DR

> **ALUMINIUM**
> **PVC**

STANDARD SIZES:
cm. 53-63-73-83-93-103-113-123-133
reducible by cm 10
STANDARD PACKAGING: 30 pieces

COMPONENTS
- Brass hexagonal push button
- 2 neoprene seals

OPTIONS
- Round nylon push button

LATERAL FASTENING

475

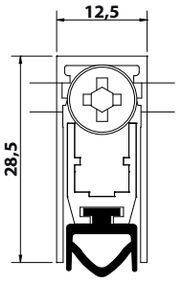

B

> **ARMOURED**

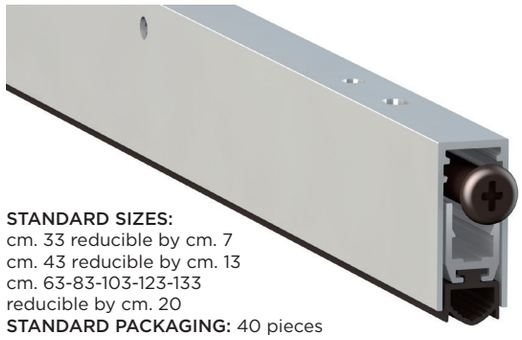

STANDARD SIZES:
cm. 33 reducible by cm. 7
cm. 43 reducible by cm. 13
cm. 63-83-103-123-133
reducible by cm. 20
STANDARD PACKAGING: 40 pieces

COMPONENTS
- Round nylon push button
- EPDM seal

OPTIONS
- Brass hexagonal push button
- Black brush 48x1100
- Self-extinguishing silicon seal

SERIES
NO SOUND

> **ISOLA** > **1370NS** > **1770XNS** > **1770NS** > **1773ACU** > **1770ACU** > **1800XNS** > **1800NS**

TRADITIONAL FASTENING BY MOVING INTERNAL PROFILE

ISOLA

DR

> **WOOD**

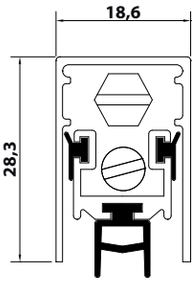

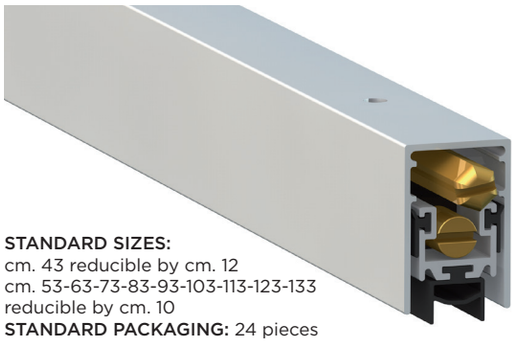

STANDARD SIZES:
cm. 43 reducible by cm. 12
cm. 53-63-73-83-93-103-113-123-133
reducible by cm. 10
STANDARD PACKAGING: 24 pieces

COMPONENTS
- Brass hexagonal push button
- 3 silicon seals

OPTIONS
- Round nylon push button

IFT Certificate n. 167 18460

FASTENING BY PRE-FITTED SCREWS

1370
NS

DR

> **STEEL**
> **ALUMINIUM**
> **ARMOURED**

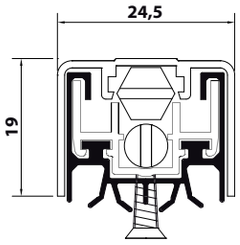

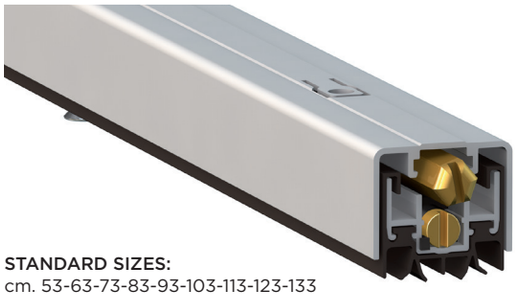

STANDARD SIZES:
cm. 53-63-73-83-93-103-113-123-133
reducible by cm. 10
STANDARD PACKAGING: 25 pieces

COMPONENTS
- Brass hexagonal push button
- Self-extinguishing silicon seal

OPTIONS
- Round nylon push button

Sound insulation certificated by Giordano n. 294098

1770
XNS

DR

> **ARMOURED**
> **WOOD**

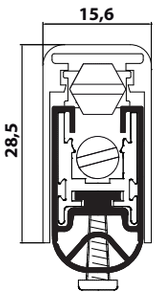

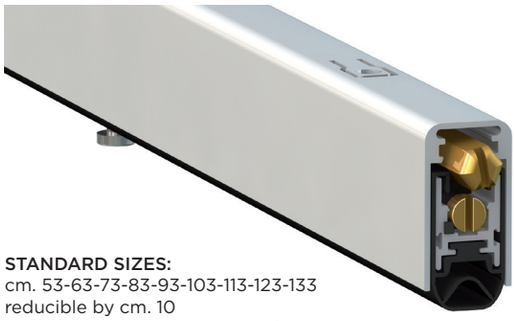

STANDARD SIZES:
cm. 53-63-73-83-93-103-113-123-133
reducible by cm. 10
STANDARD PACKAGING: 28 pieces

COMPONENTS
- Brass hexagonal push button
- Self-extinguishing silicon seal

OPTIONS
- Round nylon push button
- Self-threading screws for wood

Sound insulation certificated by Giordano n. 294098

1770
NS

DR

> **ARMOURED**
> **WOOD**

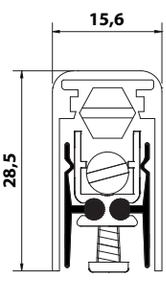

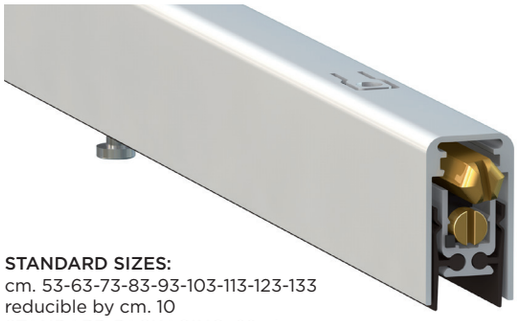

STANDARD SIZES:
cm. 53-63-73-83-93-103-113-123-133
reducible by cm. 10
STANDARD PACKAGING: 28 pieces

COMPONENTS
- Brass hexagonal push button
- Self-extinguishing silicon seal

OPTIONS
- Round nylon push button
- Self-threading screws for wood

IFT Certificate n. 167 19336/1

1773
ACU

DR

> **ARMOURED**
> **WOOD**

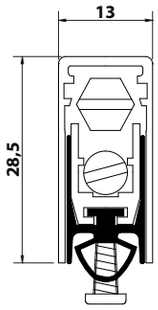

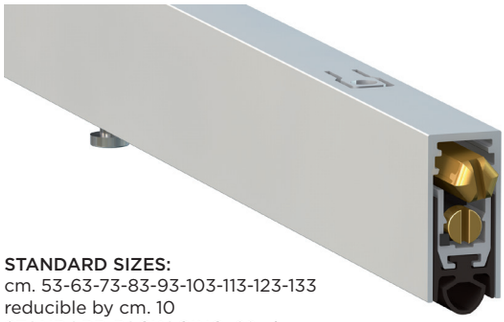

STANDARD SIZES:
cm. 53-63-73-83-93-103-113-123-133
reducible by cm. 10
STANDARD PACKAGING: 28 pieces

COMPONENTS
- Brass hexagonal push button
- Self-extinguishing silicon seal

OPTIONS
- Round nylon push button
- Self-threading screws for wood

Sound insulation certificated by Giordano n. 294098

1770
ACU

DR

> **ARMOURED**
> **WOOD**

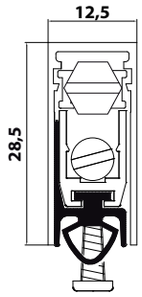

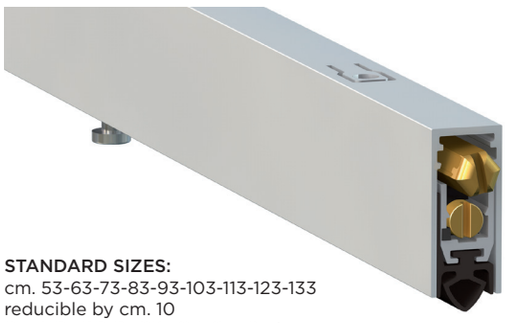

STANDARD SIZES:
cm. 53-63-73-83-93-103-113-123-133
reducible by cm. 10
STANDARD PACKAGING: 40 pieces

COMPONENTS
- Brass hexagonal push button
- Self-extinguishing silicon seal

OPTIONS
- Round nylon push button
- Self-threading screws for wood

Sound insulation certificated by Giordano n. 262912

FASTENING BY WINGS

1800
XNS

DR

> **ARMOURED**
> **WOOD**

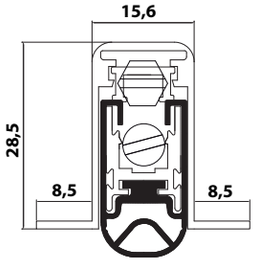

STANDARD SIZES:
cm. 53-63-73-83-93-103-113-123-133
reducible by cm. 10
STANDARD PACKAGING: 28 pieces

COMPONENTS
- Brass hexagonal push button
- Self-extinguishing silicon seal

OPTIONS
- Round nylon push button

Sound insulation certificated by Giordano n. 294098

1800
NS

DR

> **ARMOURED**
> **WOOD**

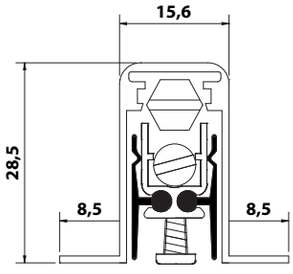

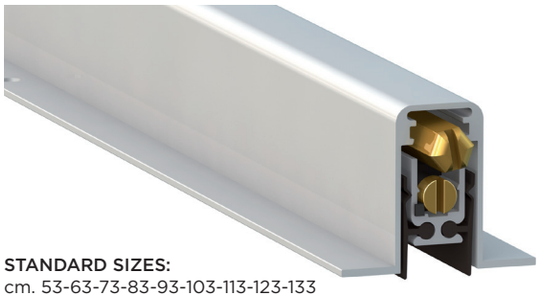

STANDARD SIZES:
cm. 53-63-73-83-93-103-113-123-133
reducible by cm. 10
STANDARD PACKAGING: 28 pieces

COMPONENTS
- Brass hexagonal push button
- Self-extinguishing silicon seal

OPTIONS
- Round nylon push button

IFT Certificate n. 167 19336/1

Comaglio
www.comaglio.it

SERIES
COMAX

> **1750** > **1450** > **1255** > **1250** > **1050** > **125SP** > **126SP** > **1151**

AUTOMATIC DRAUGHT EXCLUDER

1750

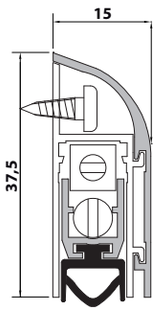

DR

> **DO IT YOURSELF**

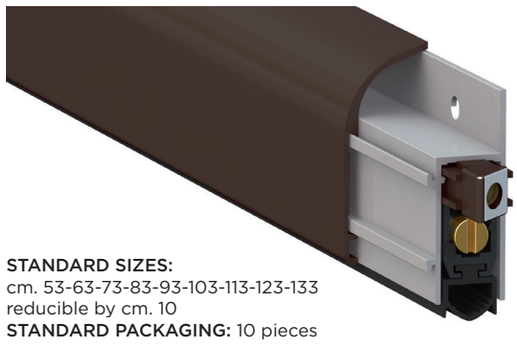

STANDARD SIZES:
cm. 53-63-73-83-93-103-113-123-133
reducible by cm. 10
STANDARD PACKAGING: 10 pieces

COMPONENTS
- Semi-circular push button
- EPDM seal

OPTIONS
- Black brush 48x1100

AVAILABLE FINISHES
Cover plate and matching end-caps available in 7 finishes: aodized bronze, silver and black electro-plate, white Painted RAL 1013, white RAL 9010, BROWN RAL 8017

Sound insulation certificated by Giordano n. 218979

1450

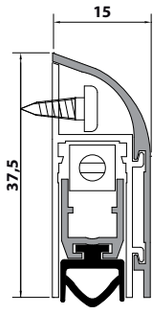

B

> **DO IT YOURSELF**

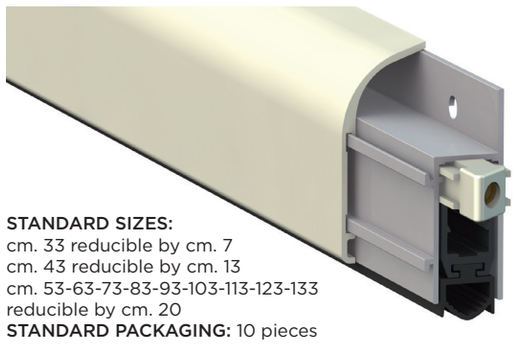

STANDARD SIZES:
cm. 33 reducible by cm. 7
cm. 43 reducible by cm. 13
cm. 53-63-73-83-93-103-113-123-133
reducible by cm. 20
STANDARD PACKAGING: 10 pieces

COMPONENTS
- Semi-circular push button
- EPDM seal

AVAILABLE FINISHES
Cover plate and matching end-caps available in 7 finishes: aodized bronze, silver and black electro-plate, white Painted RAL 1013, white RAL 9010, brown RAL 8017

FIXED DRAUGHT EXCLUDER

1255

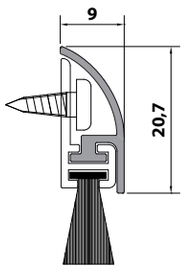

> **DO IT YOURSELF**

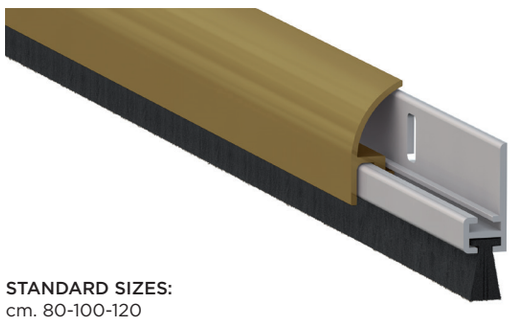

STANDARD SIZES:
cm. 80-100-120
STANDARD PACKAGING: 15 pieces

COMPONENTS
- Black brush 48x1100

OPTIONS
- EPDM seal

AVAILABLE FINISHES
Cover plate and matching end-caps available in 7 finishes: aodized bronze, silver and black electro-plate, white Painted RAL 1013, white RAL 9010, brown RAL 8017

1250

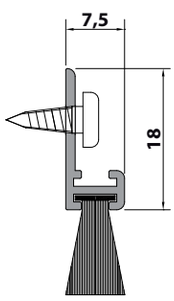

> **DO IT YOURSELF**

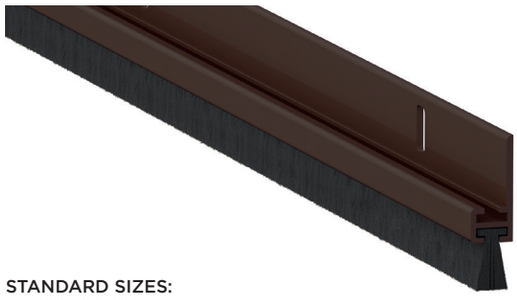

STANDARD SIZES:
cm. 80-100-120
STANDARD PACKAGING: 15 pieces

COMPONENTS
- Black brush 48x1100

OPTIONS
- EPDM seal

AVAILABLE FINISHES
Profile and matching end-caps available in 7 finishes: aodized bronze, silver and black electro-plate, white Painted RAL 1013, white RAL 9010, brown RAL 8017

1050

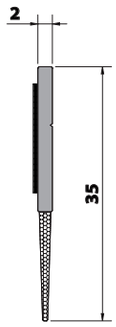

> **DO IT YOURSELF**

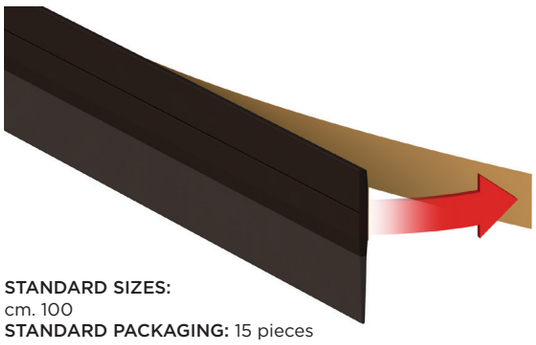

STANDARD SIZES:
cm. 100
STANDARD PACKAGING: 15 pieces

COMPONENTS
Fastening by adhesive

AVAILABLE FINISHES
White and brown

125SP

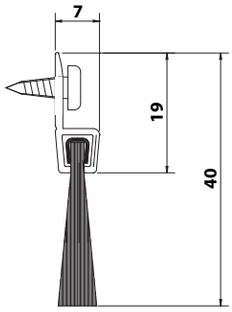

> **DO IT YOURSELF**

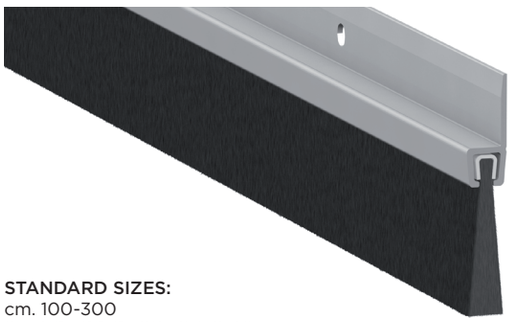

STANDARD SIZES:
cm. 100-300
STANDARD PACKAGING: 10 pieces

BRUSH SIZE
mm. 30 (125SP30)
mm. 40 (125SP40) - see drawing
mm. 50 (125SP50)
mm. 60 (125SP60)

126SP

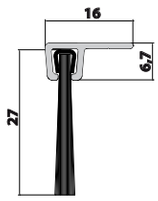

> **DO IT YOURSELF**

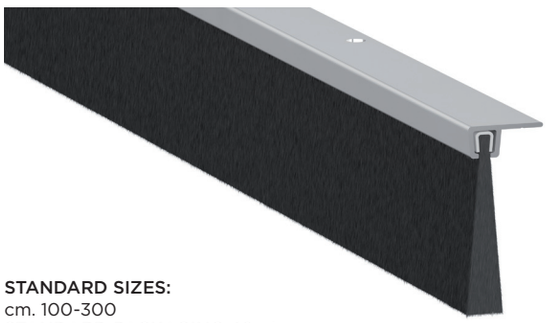

STANDARD SIZES:
cm. 100-300
STANDARD PACKAGING: 10 pieces

BRUSH SIZE
mm. 17 (126SP17)
mm. 27 (126SP27) - see drawing
mm. 37 (126SP37)

FIXED DRAUGHT EXCLUDER FOR ROLLING SHUTTER

1151

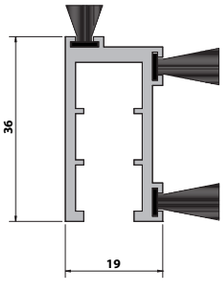

> **DO IT YOURSELF**

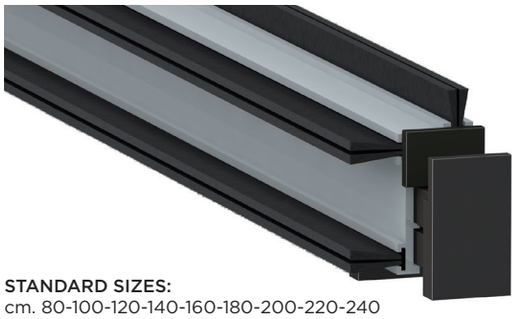

STANDARD SIZES:
cm. 80-100-120-140-160-180-200-220-240
STANDARD PACKAGING: 10 pieces

COMPONENTS
Black brush 48x900
Black brush 48x1600

AVAILABLE FINISHES
Profile and matching end-caps available in 7 finishes: aodized bronze, silver and black electro-plate, white Painted RAL 1013, white RAL 9010, brown RAL 8017

Comaglio
www.comaglio.it

SERIES
UNIVERSAL

> 1375 > 1380 > 1350 > 1355 > 1360

SILLS

1375

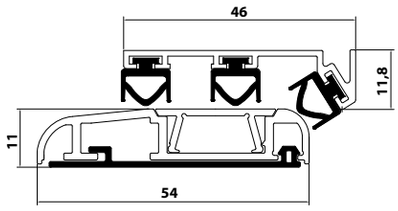

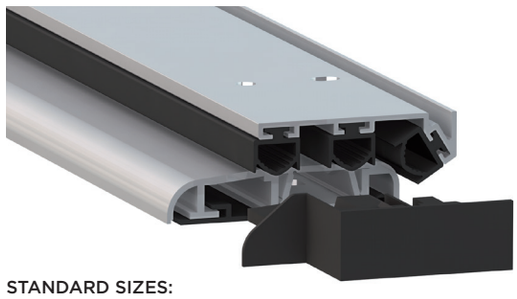

STANDARD SIZES:
cm. 43-53-63-73-83-93-103-113-123-133
STANDARD PACKAGING: 15 pieces

COMPONENTS
Silver anodised aluminium sill with a floor seal and hidden fastening
Silver anodised profile for door with 3 EPDM seal
2 head plates

OPTIONS
Special big section of seal for profile for door

1380

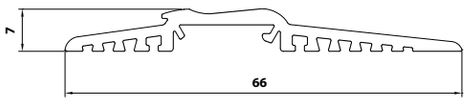

STANDARD SIZES:
cm. 43-53-63-73-83-93-103-113-123-133
STANDARD PACKAGING: 15 pieces

COMPONENTS
Aluminium sill combined with a draught excluder

FIXED DRAUGHT EXCLUDER

1350

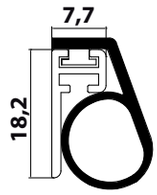

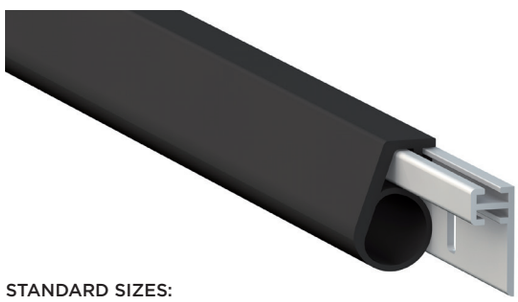

STANDARD SIZES:
cm. 80-100-120
STANDARD PACKAGING: 15 pieces

COMPONENTS
Alluminium raw profile
EPDM seal

ADHESIVE SEALS

1355

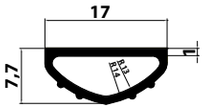

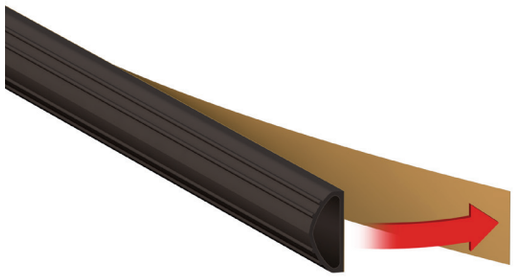

STANDARD PACKAGING: 75 mt

COMPONENTS
EPDM seal with adhesive

1360

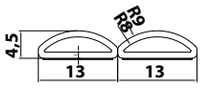

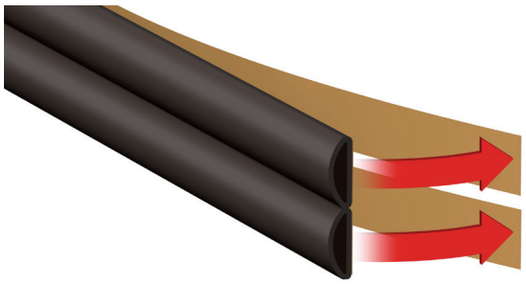

COMPONENTS
EPDM seal with adhesive

STANDARD PACKAGING: 50 mt

STANDS AND PACKAGING

• Counter samples in WOOD, ALUMINIUM and PVC, useful for showing the functions, characteristics and fastening systems of all our draught excluders.

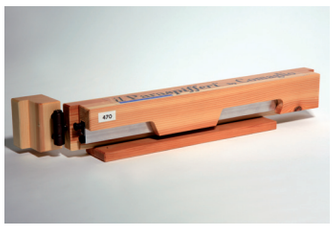

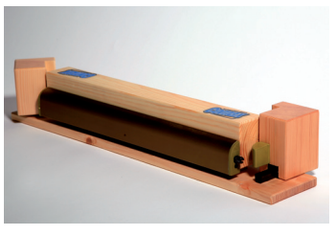

• Metal display 50cm wide with 6 hooks (10 items per hook when fully loaded)
• Metal display l00cm wide with 12 hooks (10 items per hook when fully loaded)

Comaglio
www.comaglio.it

RAINERIDESIGN

Comaglio

NOTHING WILL GET UNDER YOUR DOOR.

Via Industriale, 4/b - 25080 Muscoline (Bs) - Italy
Tel. +39 0365 373790
Fax +39 0365 371811
info@comaglio.it

WWW.COMAGLIO.IT